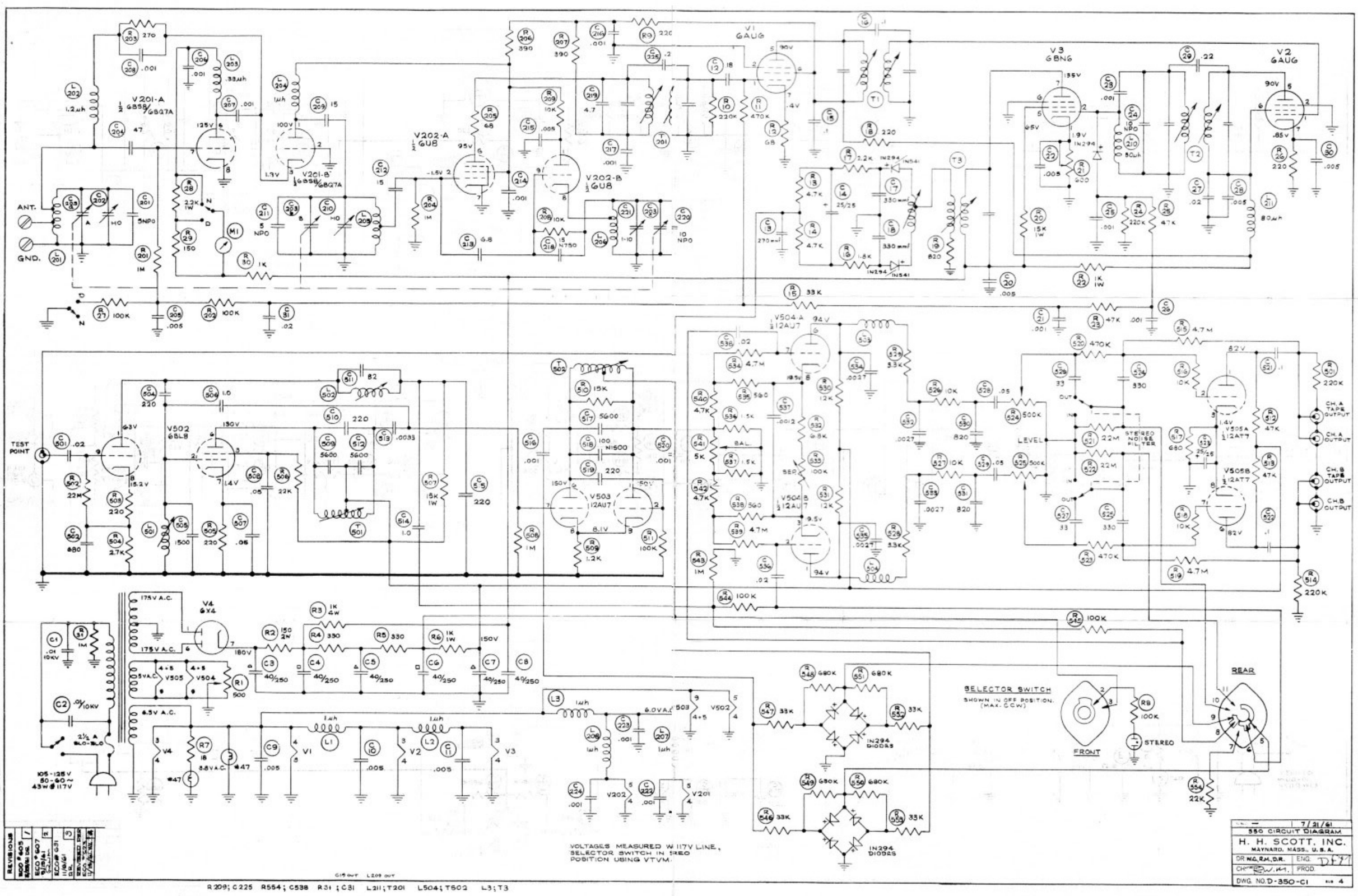

ANT.
GND.
TEST POINT
V201-A ½ 6BS8/6BQ7A
V201-B ½ 6BS8/6BQ7A
V202-A ½ 6U8
V202-B ½ 6U8
V1 6AU6
V3 6BN6
V2 6AU6
V502 6BL8
V503 12AU7
V504-A ½ 12AU7
V504-B ½ 12AU7
V505A ½ 12AT7
V505B ½ 12AT7
V4 6X4
STEREO NOISE FILTER
LEVEL
BAL.
SEP.
CH.A TAPE OUTPUT
CH.A OUTPUT
CH.B TAPE OUTPUT
CH.B OUTPUT
SELECTOR SWITCH
SHOWN IN OFF POSITION. (MAX. CCW)
FRONT
STEREO
REAR
IN294 DIODES
105-125V 50-60~ 43W @ 117V
2½ A BLO-BLO
VOLTAGES MEASURED W 117V LINE, SELECTOR SWITCH IN REO POSITION USING VTVM.
REVISIONS
ECO # 605
ECO # 607
ECO # 631
11/6/61
REVISED PER ECO #
7/21/61
350 CIRCUIT DIAGRAM
H. H. SCOTT, INC.
MAYNARD, MASS., U.S.A.
DR W.G., R.M., D.R.
ENG.
CH. R.W.M.
PROD.
DWG. NO. D-350-C1
SHT 4
C15 OUT L209 OUT
R209; C225 R554; C538 R31; C31 L211; T201 L504; T502 L3; T3